CAFÉS & BUSINESS BOOTHS

10FT CONTAINER BOOTH

SKU ARK-BT10-STD | 10ft | Used Grade A | Ready stock | Promo

PURCHASE PRICE

Rp 48,500,000

MONTHLY RENTAL

Rp 2,250,000/mo

Up to 7% off for 12-month rentals

External dimensions	2.99 × 2.44 × 2.59 m
Internal dimensions	2.83 × 2.35 × 2.39 m
Capacity	1–2 people
Lead time	Ready to ship in 3–7 working days

The 10ft Container Booth is a cost-effective way to start a drinks, snacks or retail kiosk business. It comes with a serving hatch and awning, a counter, shelving, plus lighting and power sockets already installed.

Its compact size makes it easy to place in parking areas, food courts, campuses and at events.

SPECIFICATIONS

Frame	Original container frame + galvanized hollow-section reinforcement
Exterior wall	Corrugated steel plate (corten steel) 1.6–2.0 mm
Interior wall	Easy-clean PVC panels
Insulation	50 mm glass wool + aluminum foil
Ceiling	PVC panels + LED downlights
Floor	Checker plate / anti-slip vinyl
Door	Steel panel door + mortise lock
Window	Serving hatch + awning flap
Electrical installation	1,300 VA, MCB, 4 power sockets, LED lights
Paint	Anti-rust epoxy primer + PU topcoat

FEATURES & INCLUSIONS

- ✓ Serving hatch + awning
- ✓ Service counter
- ✓ Wall shelves
- ✓ Front signage
- ✓ LED lights + power sockets
- ✓ Double padlocks

Excludes 11% VAT & delivery. Prices may change without notice. Final prices are stated in our official quotation.

VIEW ONLINE
www.containermodifikasi.co.id/en/catalog/booth-container-10ft

DIMENSION DRAWING

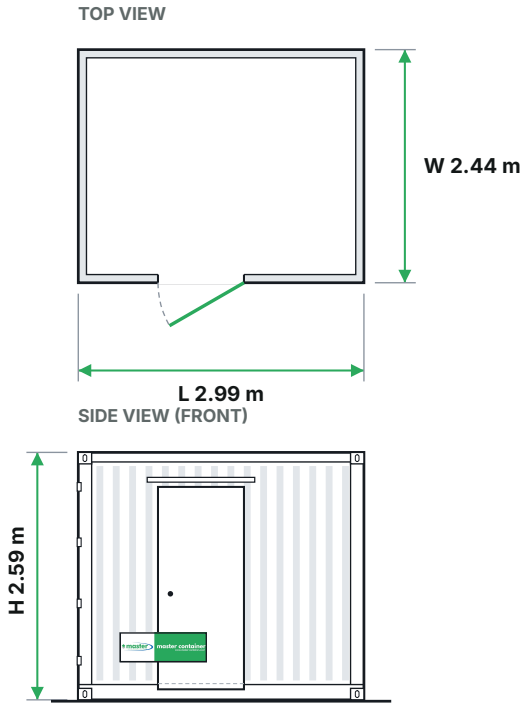

1 door — Standard outer dimensions; door, window & fitting positions can be adjusted.

ADD-ONS (OPTIONAL)

ADD-ON	BUY	RENT/MO
1,000 L Water Tank + Pump	**Rp 3,850,000**	Rp 250,000
Custom Canopy / Awning	**Rp 3,500,000**	Rp 200,000
Custom Paint Color + Company Logo	**Rp 4,250,000**	—
2-Camera CCTV + Alarm	**Rp 3,600,000**	Rp 300,000

Excludes 11% VAT & delivery. Prices may change without notice. Final prices are stated in our official quotation.

VIEW ONLINE
www.containermodifikasi.co.id/en/catalog/booth-container-10ft